ENGINEERING
TOMORROW

Data Sheet

Solenoid valve
Type **EV222B**

Servo operated with isolated diaphragm for dirty and aggressive fluids

EV222B is an indirect servo-operated solenoid valve programme for use in connection with contaminated or aggressive media.

Valve body in stainless steel, isolating diaphragm protecting the solenoid system against impurities, build in pilot filter, replaceable equalizing orifice, enclosures up to IP67 ensure a reliable and satisfaction function.

Features

- Clip on coil
- Viscosity: Up to 50 cSt
- Ambient temperature: Up to 60 °C
- Coil enclosure: Up to IP67
- Isolating diaphragm
- Water hammer damped Built in filter for protection of pilot system

1 Portfolio overview

Table 1: Portfolio overview

Features	EV222B
	
Body material	Stainless steel
DN [mm]	15-50
Connection	G1/2" - G2"
Sealing material	FKM
Function	NC
K_v [m³/h]	4-40
Differential pressure range [bar]	0.3-10
Temperature range [°C]	0-50

2 Function

2.1 Function, NC

2/2-way servo-operated When voltage is applied to the coil (8), the armature (2), with the isolating diaphragm (3), is lifted clear of the pilot orifice (4) and the diaphragm (5), is lifted by the fluid pressure - the main orifice (6) opens.

When voltage is disconnected the isolating diaphragm (3), is pressed down against the pilot orifice (4), by the armature spring (1) and pressure is built up above the diaphragm (5), via the equalizing orifice (7). The main orifice is closed by the fluid pressure and the spring (9).The isolating diaphragm keeps the medium away from the actuator.

The space above the isolating diaphragm is filled up with silicone oil.

Figure 1: Function, NC

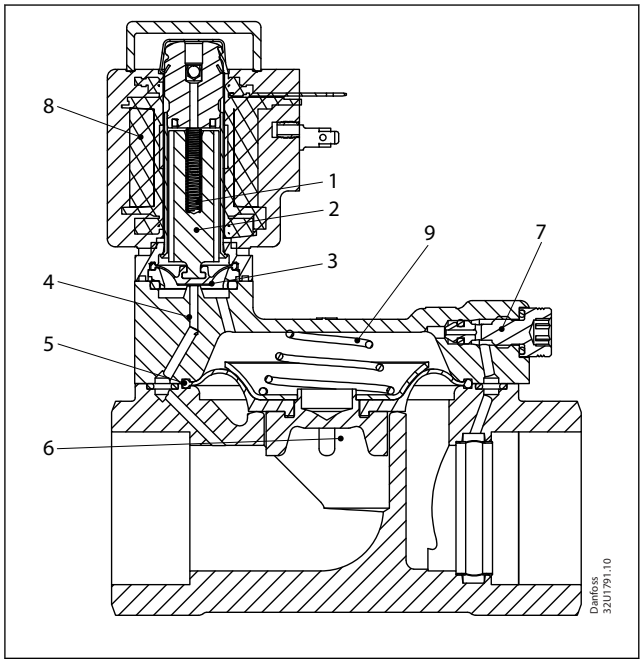

1.	Armature spring
2.	Armature
3.	Isolating diaphragm
4.	Pilot orifice
5.	Diaphragm
6.	Main orifice
7.	Equalizing orifice
8.	Coil
9.	Spring

3 Application

It is recommended to use a filter in front of the valve. Recommended filter 50 mesh (297 microns).

Figure 2: Filter

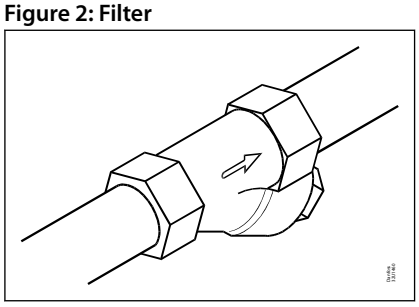

In water applications, exercise the valves at least once every 24 hours, meaning change the state of the valve. The valve exercise will minimize the risk of the valve sticking due to calcium carbonate, zinc or iron oxide build-up.

Figure 3: Exercise: Valve on/off

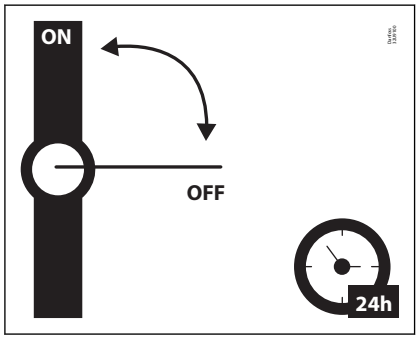

To minimize scaling, and corrosion attack it is recommended that the water passing the valve have the following values:

- Hardness 6-18 °dH to avoid scaling (chalk / lime stone build up).
- Conductivity 50 – 800 µS/cm to avoid brass dezincification and corrosion.
- Above 25°C media temperature avoid stagnant water inside the valve to avoid dezincification and corrosion attack.

4 Product specification

4.1 Technical data

Table 2: Technical data

Media	FKM	Contaminated or aggressive media
Media temperature [°C]	FKM	0-50 °C
Ambient temperature [°C]	Up to 60 °C	
K_v value [m³/h]	DN15	4 m³/h
	DN20	8 m³/h
	DN25	11 m³/h
	DN32	18 m³/h
	DN40	24 m³/h
	DN50	40 m³/h
Min. Opening differential pressure [bar]	0.3 bar	
Max. Opening differential pressure [bar]	10 bar	
Max. working pressure [bar]	10 bar	
Max. test pressure [bar]	15 bar	
Viscosity [cSt]	Max. 50 cSt	

Time to open/close

Table 3: Time to open/close

Main type	EV222B 15	EV222B 20	EV222B 25	EV222B 32	EV222B 40	EV222B 50
Time to open [ms] (1)	40	40	300	1000	1500	5000
Time to close [ms](1)	350	1000	1000	2500	4000	10000

(1) The times are indicative and apply to water. The exact times will depend on the pressure conditions. Closing times can be changed by replacement of the equalizing orifice.

Materials

Table 4: Materials

Components	Materials	Specifications
Valve body/cover	Stainless steel	W.no. 1.4581 / AISI 318
Flange for isolating diaphragm	Stainless steel	W.no. 1.4581 / AISI 318
Diaphragm plate	Stainless steel	W.no. 1.4581 / AISI 318
Isolating diaphragm	FKM	
Main diaphragm	FKM	
Closing spring	Stainless steel	W.no. 1.4310 / AISI 301
O-rings	FKM	
Fluid above isolating	Silicone oil	

4.2 Dimension and weight

Table 5: Dimension and weight

Type	L	B	B_1 Coil type [mm]		H	H_1	Weight without coil
	[mm]	[mm]	BB / BE	BG	[mm]	[mm]	[kg]
EV222B 15	80	52	46	68	104	15	0.8
EV222B 20	90	58	46	68	108	18	1.0
EV222B 25	109	70	46	68	118	22	1.4
EV222B 32	120	82	46	68	125	27	2.0
EV222B 40	130	95	46	68	134	32	3.2
EV222B 50	162	113	46	68	140	37	4.3

Figure 4: Dimension

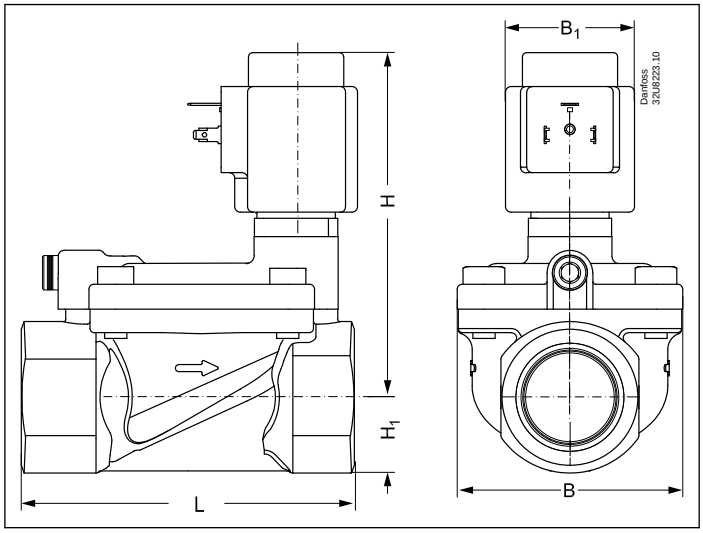

4.3 Mounting

Figure 5: Mounting angle

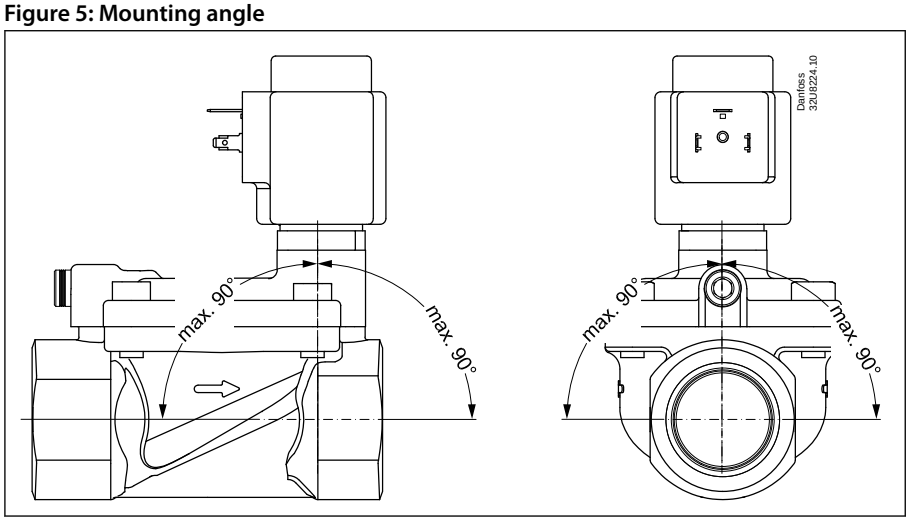

5 Ordering

5.1 Parts program

Table 6: Stainless steel, valve body NC

ISO228/1 connection	Orifice	K_v value	Sealing	Function
	[mm]	[m³/h]		NC
G1/2	15	4	FKM	032U8526
G3/4	20	8		032U8527
G1	25	11		032U8528
G11/4	32	18		032U8529
G11/2	40	24		032U8530
G2	50	40		032U8531

5.2 Accessories

Coil

Table 7: Coils can be used with EV222B

Coil	Type	Power consumption	Enclosure	Features
	BB, clip on	10 W AC 18 W DC	IP00 with spade connector	IP20 with protective cap, IP67 with cable plug
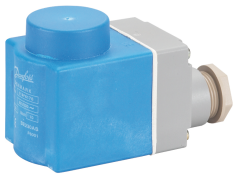	BE, clip on	10 W AC 18 W DC	IP67	With terminal box
	BG, clip-on	12 W AC 20 W DC	IP67	With terminal box

Cable plug

Figure 6: Cable plug

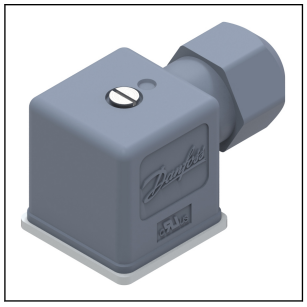

Table 8: Cable plug

Cable plug size	Description	Code no
DIN 18	Cable plug IP67	042N1256

Universal electronic multi-timer, Type ET 20M

Figure 7: Type ET 20 M

Table 9: Type ET 20 M

Type	Voltage [V]	Suitable for coil types	Code no.
BA024A	240-0240	AL, AM, AS, AZ, BA, BD, BB	042N0185

Spare part kits

Isolating diaphragm kit

The isolating diaphragm design ensures that no fluid enters the armature area, which gives the following advantages: The valve is resistant to aggressive fluids, impurities in the fluid and to calcarous and scale deposits.

Table 10: Isolating diaphragm kit

Type	Sealing	
	EPDM[1]	FKM[2]
EV222B 15-50	042U1009	042U1010
	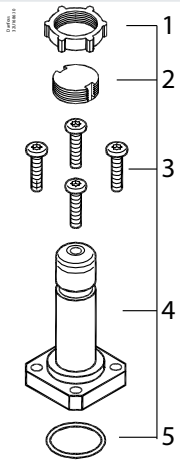	
	1. Locking button 2. Locking nut 3. 4 x screws 4. Assembled isolating unit 5. O-ring	

[1] Media temperature -20 - 50°C
[2] Media temperature 0 - 50°C

Diaphragm spare parts kit, NC

Table 11: Diaphragm spare parts kit, NC

Type	Actuator kit, NC, DZR/SS Sealing FKM
EV222B 15	032U6326
EV222B 20	032U6327
EV222B 25	032U6328
EV222B 32	032U6329
EV222B 40	032U6330
EV222B 50	032U6331
	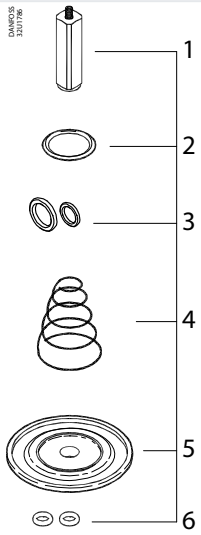
	1. Armature with valve plate and spring 2. O-ring for the armature tube 3. 2x O-rings for the equalizing orifice 4. Closing spring 5. Diaphragm 6. 2 x O-rings for the pilot system

NOTE:
For complete spare parts kit, the isolating diaphragm kit must be ordered separately

6 Online support

Danfoss offers a wide range of support along with our products, including digital product information, software, mobile apps, and expert guidance. See the possibilities below.

The Danfoss Product Store

The Danfoss Product Store is your one-stop shop for everything product related—no matter where you are in the world or what area of the cooling industry you work in. Get quick access to essential information like product specs, code numbers, technical documentation, certifications, accessories, and more.
Start browsing at store.danfoss.com.

Find technical documentation

Find the technical documentation you need to get your project up and running. Get direct access to our official collection of data sheets, certificates and declarations, manuals and guides, 3D models and drawings, case stories, brochures, and much more.

Start searching now at www.danfoss.com/en/service-and-support/documentation.

Danfoss Learning

Danfoss Learning is a free online learning platform. It features courses and materials specifically designed to help engineers, installers, service technicians, and wholesalers better understand the products, applications, industry topics, and trends that will help you do your job better.

Create your Danfoss Learning account for free at www.danfoss.com/en/service-and-support/learning.

Get local information and support

Local Danfoss websites are the main sources for help and information about our company and products. Find product availability, get the latest regional news, or connect with a nearby expert—all in your own language.

Find your local Danfoss website here: www.danfoss.com/en/choose-region.

Spare Parts

Get access to the Danfoss spare parts and service kit catalog right from your smartphone. The app contains a wide range of components for air conditioning and refrigeration applications, such as valves, strainers, pressure switches, and sensors.

Download the Spare Parts app for free at www.danfoss.com/en/service-and-support/downloads.